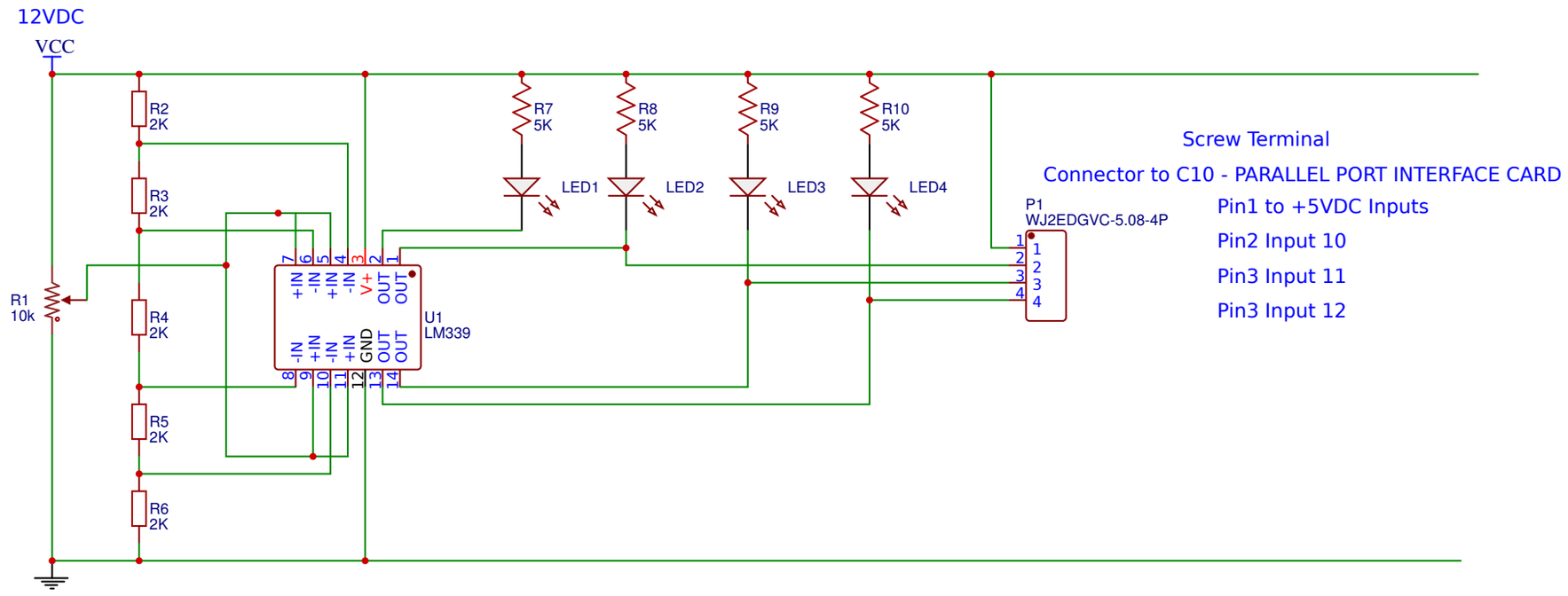

TITLE: Window Comparator Gap Controller WEDM	REV: 1.0
Date: 2017-09-30	Sheet: 1/1
EasyEDA V4.9.3	Drawn By: ghislainvdwalle